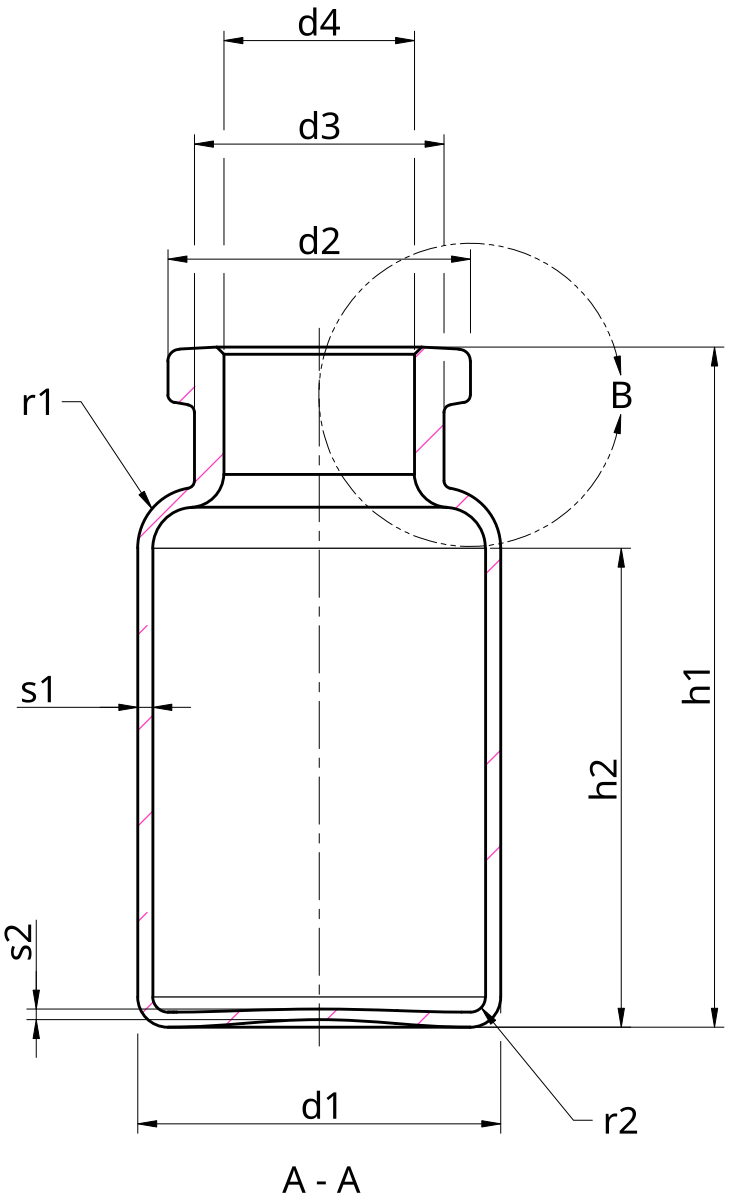

A - A

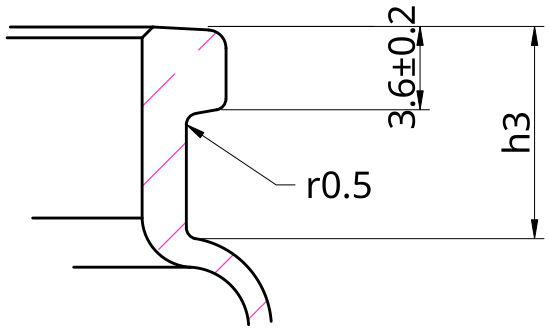

B
3:1

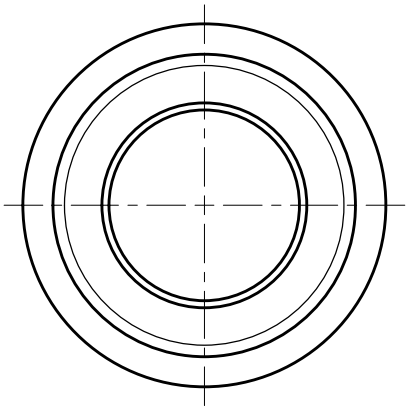

DIMENSION	BASIC (MM)	UPPER (MM)	LOWER (MM)	DIMENSION	BASIC (MM)	UPPER (MM)	LOWER (MM)
d1	24.00	0.20	0.20	s1	1.00	0.04	0.04
d2	20.00	0.20	0.30	s2	Min0.70	N/A	0.00
d3	Max16.50	0.00	N/A	r1	Approx4.0	-	-
d4	12.60	0.20	0.20	r2	Approx2.0	-	-
h1	45.00	0.50	0.50				
h2	Min30.00	N/A	0.00				
h3	9.00	0.50	0.50				

YANGTZE

DO NOT SCALE DRAWING

FIRST ANGLE PROJECTION

	NAME	SIGNATURE	DATE
DRAWN	June		2026-03-21
CHECKED	Aaron		2026-03-22
APPROVED	Aaron		2026-03-22

MATERIAL

FINISH

SKU: TGV-IS10

TITLE: Tubular Glass Vial
Type I, ISO 10R

SIZE	DWG NO.	REV.
A4	0008	1

SCALE	WEIGHT	SHEET
2:1		1 of 1