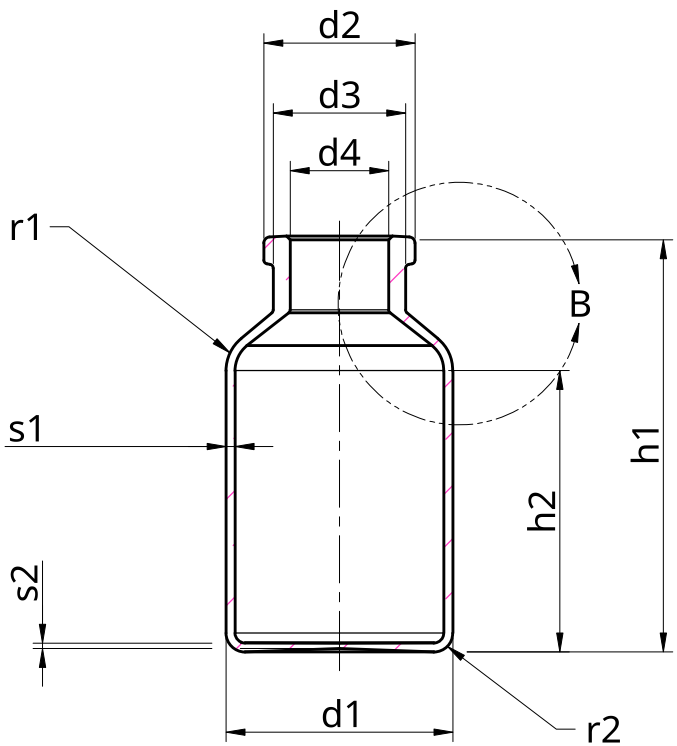


A - A

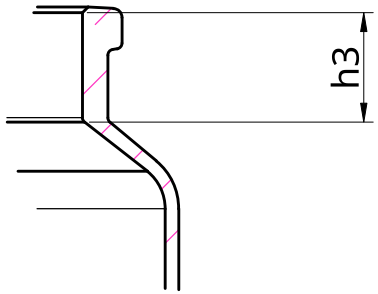


B
1.5:1

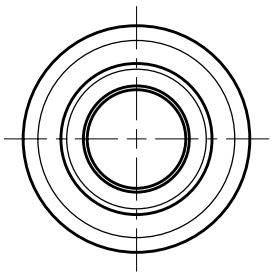

| DIMENSION | BASIC (MM) | UPPER (MM) | LOWER (MM) | DIMENSION | BASIC (MM) | UPPER (MM) | LOWER (MM) |
|---|---|---|---|---|---|---|---|
| d1 | 30.00 | 0.25 | 0.25 | s1 | 1.20 | 0.05 | 0.05 |
| d2 | 20.00 | 0.20 | 0.20 | s2 | Min0.70 | N/A | 0.00 |
| d3 | Max17.50 | 0.00 | N/A | r1 | Approx5.5 | - | - |
| d4 | 12.60 | 0.20 | 0.20 | r2 | Approx2.5 | - | - |
| h1 | 55.00 | 0.70 | 0.70 | | | | |
| h2 | Min35.00 | N/A | 0.00 | | | | |
| h3 | 10.00 | 0.70 | 0.70 | | | | |

YANGTZE

DO NOT SCALE DRAWING

FIRST ANGLE PROJECTION

| | NAME | SIGNATURE | DATE |
|---|---|---|---|
| DRAWN | June | | 2026-07-15 |
| CHECKED | Aaron | | 2026-07-15 |
| APPROVED | Aaron | | 2026-07-15 |

MATERIAL

FINISH

SKU: TGV-IS20

TITLE: Tubular Glass Vial
Type I, ISO 20R

| SIZE | DWG NO. | REV. |
|---|---|---|
| A4 | 0018 | 1 |

| SCALE | WEIGHT | SHEET |
|---|---|---|
| 1:1 | | 1 of 1 |