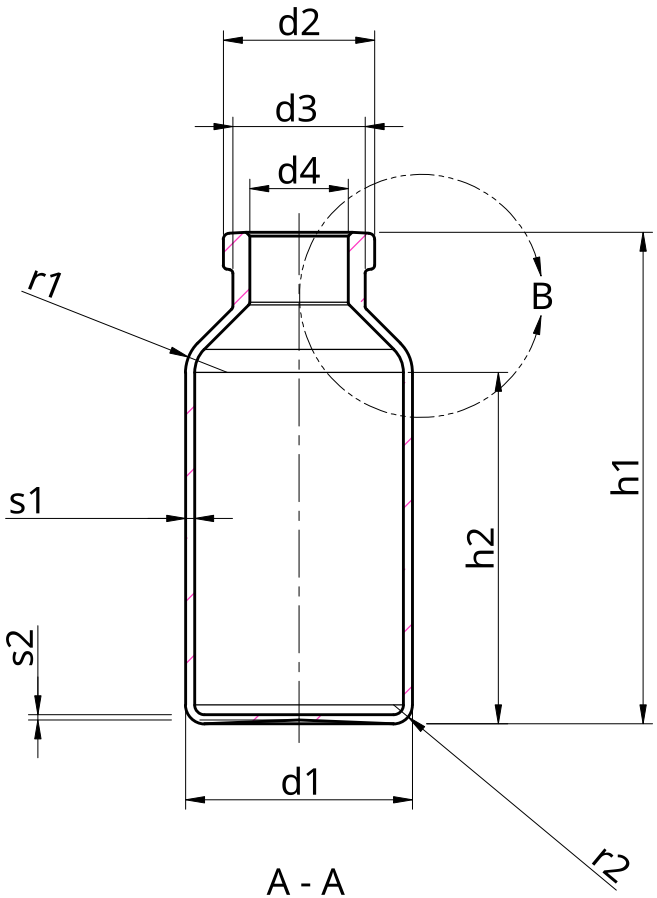

A - A

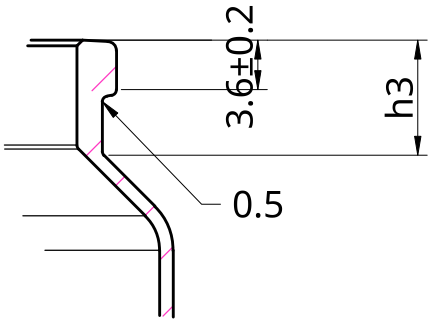

B
1.5:1

DIMENSION	BASIC (MM)	UPPER (MM)	LOWER (MM)	DIMENSION	BASIC (MM)	UPPER (MM)	LOWER (MM)
d1	30.00	0.25	0.25	s1	1.20	0.05	0.05
d2	20.00	0.20	0.20	s2	Min0.70	N/A	0.00
d3	Max17.50	0.00	N/A	r1	Approx5.5	-	-
d4	12.60	0.20	0.20	r2	Approx2.5	-	-
h1	65.00	0.70	0.70				
h2	Min45.00	N/A	0.00				
h3	10.00	0.75	0.75				

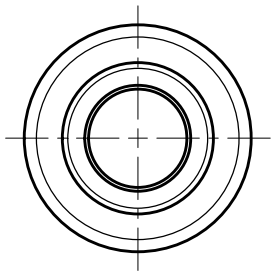

YANGTZE

DO NOT SCALE DRAWING

FIRST ANGLE PROJECTION

	NAME	SIGNATURE	DATE
DRAWN	June		2026-07-16
CHECKED	Aaron		2026-07-17
APPROVED	Aaron		2026-07-17

MATERIAL

FINISH

SKU: TGV-IS25

TITLE: Tubular Glass Vial
Type I, ISO 25R

SIZE	DWG NO.	REV.
A4	0021	1

SCALE	WEIGHT	SHEET
1:1		1 of 1