YANGTZE

TECHNICAL DATA SHEET

DOC REF: TGV-IS02-A-13-50-YA-AN-U-E-D-NE-125
VERSION: 1.0

PRODUCT IDENTIFICATION & VISUAL

Tubular Glass Vial

TECHNICAL DESCRIPTION:

Borosilicate Glass, 16*35mm, Amber, ISO 2R, Sterile Water for Injection(WFI), Depyrogenated, EO Sterilized, Ready to Use. Yangtze Aero Nest&Tub, Double Tyvek Breathing Bag Pack, 125 pcs/system



BLUEPRINT GEOMETRY



SYSTEM PACKAGING



VIAL SPECS

Finish (Neck Size)	13mm
d1 (Body Diameter)	16.0 mm
h1 (Body Height)	35.0 mm
Wall Thickness	1.0 mm

PACKAGING & PROCESSING

Package System	Yangtze Aero System
Carrier Type	Aero Nest & Tub
Sterilization	EO (Ethylene Oxide)
Bagging	Double Bag

LOGISTICS & HANDLING

Packing	125 pcs/Unit; 14 Units/Box	Total	1750 pcs/Box
Box Dimensions	580 x 465 x 320 mm	Volume	0.0863 m^3
Weight	N.W: 10 kg; G.W: 15 kg	Pallet	Standard

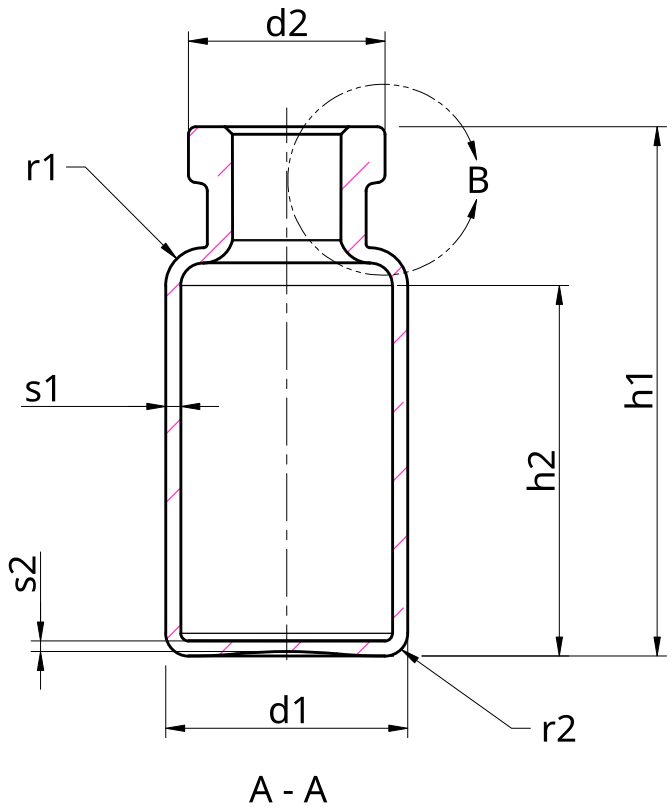

A - A

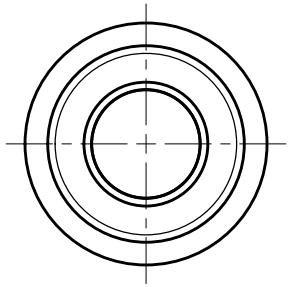

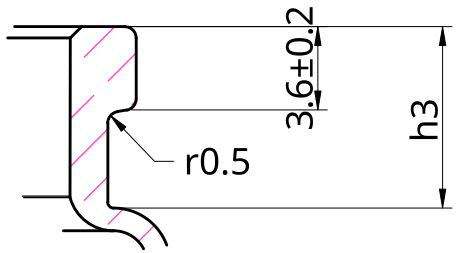

B
3:1

DIMENSION	BASIC (MM)	UPPER (MM)	LOWER (MM)	DIMENSION	BASIC (MM)	UPPER (MM)	LOWER (MM)
d1	16.00	0.15	0.15	s1	1.00	0.04	0.04
d2	13.00	0.20	0.30	s2	Min0.70	N/A	0.00
d3	Max10.50	0.00	N/A	r1	Approx2.5	-	-
d4	7.00	0.20	0.20	r2	Approx1.5	-	-
h1	35.00	0.50	0.50				
h2	Min22.00	N/A	0.00				
h3	8.00	0.50	0.50				

YANGTZE

DO NOT SCALE DRAWING

FIRST ANGLE PROJECTION

	NAME	SIGNATURE	DATE
DRAWN	June		2026-03-11
CHECKED	Aaron		2026-03-12
APPROVED	Aaron		2026-03-12

MATERIAL

FINISH

SKU: TGV-IS02-A

TITLE: Tubular Glass Vial
Type I, ISO 2R, Amber

SIZE	DWG NO.	REV.
A4	0005	1

SCALE	WEIGHT	SHEET
2:1		1 of 1