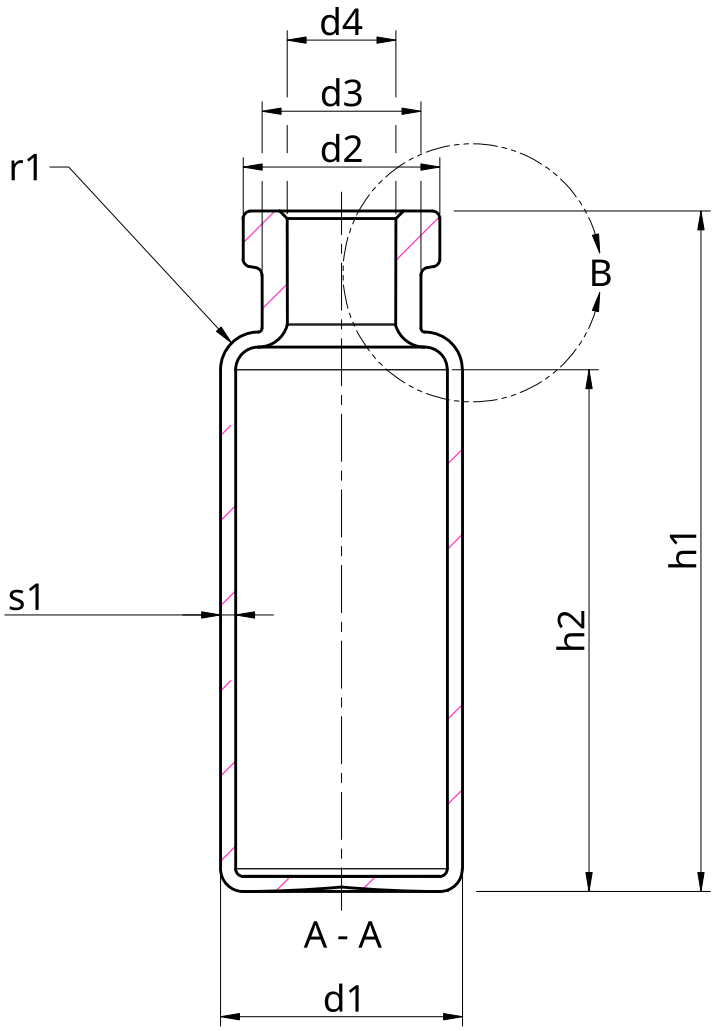

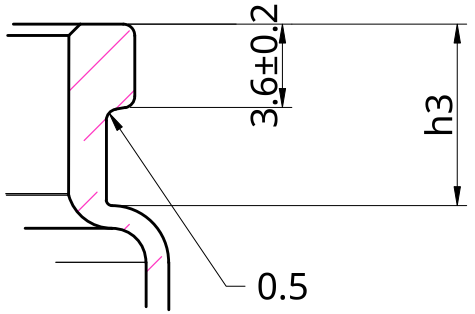

B
3:1

DIMENSION	BASIC (MM)	UPPER (MM)	LOWER (MM)	DIMENSION	BASIC (MM)	UPPER (MM)	LOWER (MM)
d1	16.00	0.15	0.15	s1	1.00	0.04	0.04
d2	13.00	0.20	0.30	s2	Min0.60	N/A	0.00
d3	Max10.50	0.00	N/A	r1	Approx2.5	-	-
d4	7.00	0.20	0.20	r2	Approx1.5	-	-
h1	45.00	0.50	0.50				
h2	Min32.00	N/A	0.00				
h3	8.00	0.50	0.50				

YANGTZE

DO NOT SCALE DRAWING

FIRST ANGLE PROJECTION

	NAME	SIGNATURE	DATE
DRAWN	June		2026-07-16
CHECKED	Aaron		2026-07-17
APPROVED	Aaron		2026-07-17

MATERIAL

FINISH

SKU: TGV-IS04

TITLE: Tubular Glass Vial
Type I, ISO 4R

SIZE	DWG NO.	REV.
A4	0019	1

SCALE	WEIGHT	SHEET
2:1		1 of 1