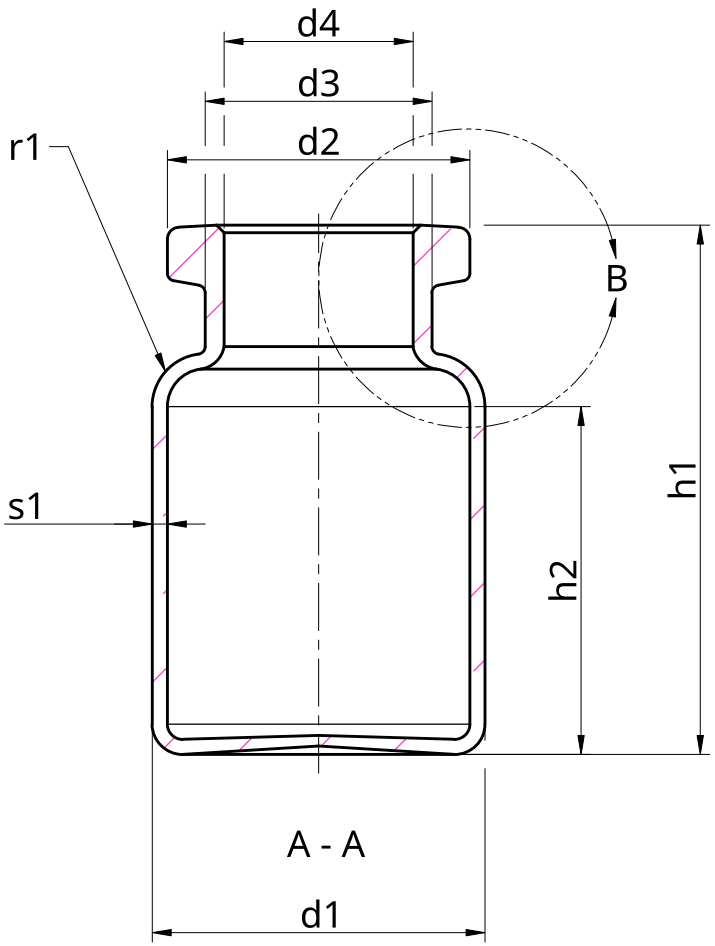

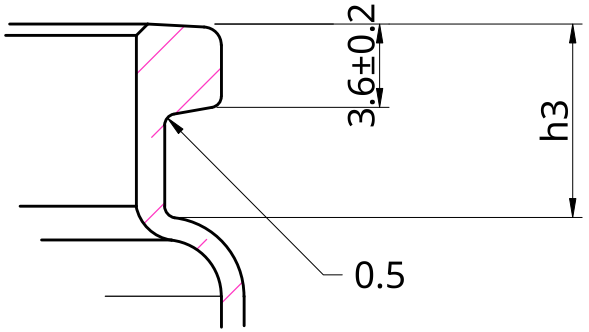

B
3:1

DIMENSION	BASIC (MM)	UPPER (MM)	LOWER (MM)	DIMENSION	BASIC (MM)	UPPER (MM)	LOWER (MM)
d1	22.00	0.20	0.20	s1	1.00	0.04	0.04
d2	20.00	0.20	0.30	s2	Min0.70	N/A	0.00
d3	Max16.50	0.00	N/A	r1	Approx3.5	-	-
d4	12.60	0.20	0.20	r2	Approx2.0	-	-
h1	35.00	0.50	0.50				
h2	Min22.00	N/A	0.00				
h3	8.50	0.50	0.50				

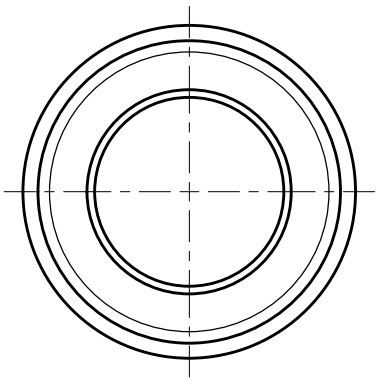

YANGTZE

DO NOT SCALE DRAWING

FIRST ANGLE PROJECTION

	NAME	SIGNATURE	DATE
DRAWN	June		2026-01-11
CHECKED	Aaron		2026-01-12
APPROVED	Aaron		2026-01-12

MATERIAL

FINISH

SKU: TGV-LP22X35

TITLE: Tubular Glass Vial
Type I, 5ml

SIZE: A4 | DWG NO.: 0002 | REV.: 1

SCALE: 2:1 | WEIGHT: | SHEET: 1 of 1