TECHNICAL DATA SHEET

DOC REF: TGV-IS06-A-20-50-YA-AN-U-E-D-NE-125
VERSION: 1.0

PRODUCT IDENTIFICATION & VISUAL

Tubular Glass Vial

TECHNICAL DESCRIPTION:

Borosilicate Glass, 22*40mm, Amber, ISO 6R, Sterile Water for Injection(WFI), Depyrogenated, EO Sterilized, Ready to Use. Yangtze Aero Nest&Tub, Double Tyvek Breathing Bag Pack, 125 pcs/system



BLUEPRINT GEOMETRY



SYSTEM PACKAGING



VIAL SPECS

Finish (Neck Size)	20mm
d1 (Body Diameter)	22.0 mm
h1 (Body Height)	40.0 mm
Wall Thickness	1.0 mm

PACKAGING & PROCESSING

Package System	Yangtze Aero System
Carrier Type	Aero Nest & Tub
Sterilization	EO (Ethylene Oxide)
Bagging	Double Bag

LOGISTICS & HANDLING

Packing	125 pcs/Unit; 5 Units/Box	Total	625 pcs/Box
Box Dimensions	410 x 350 x 310 mm	Volume	0.0445 m^3
Weight	N.W: 7 kg; G.W: 8 kg	Pallet	Standard

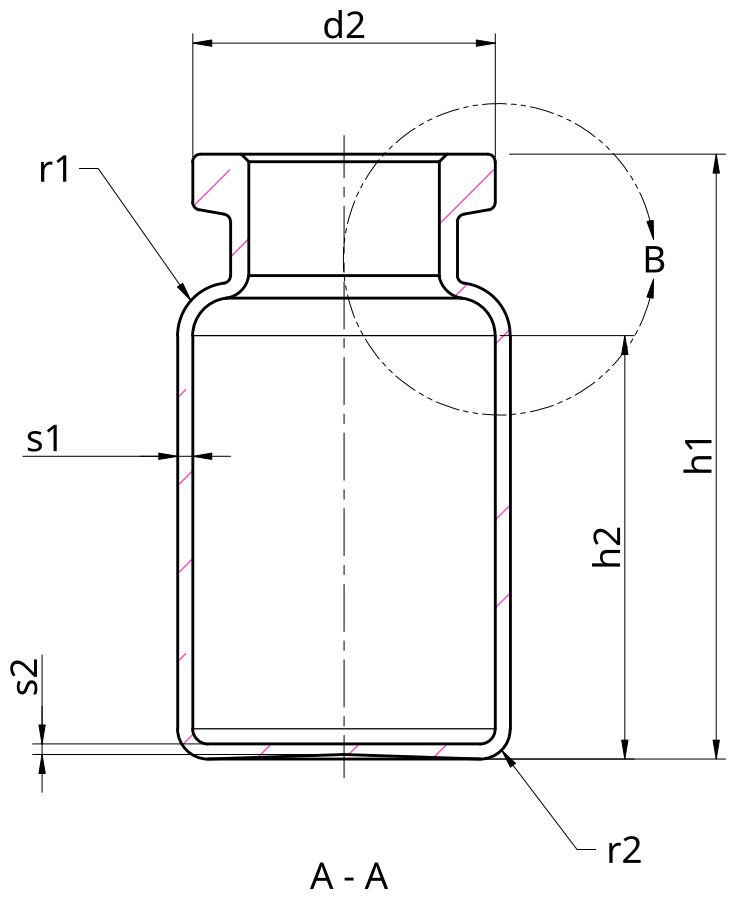

A - A

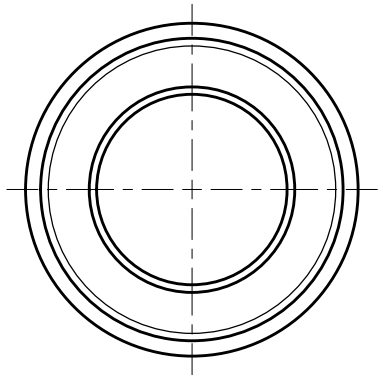

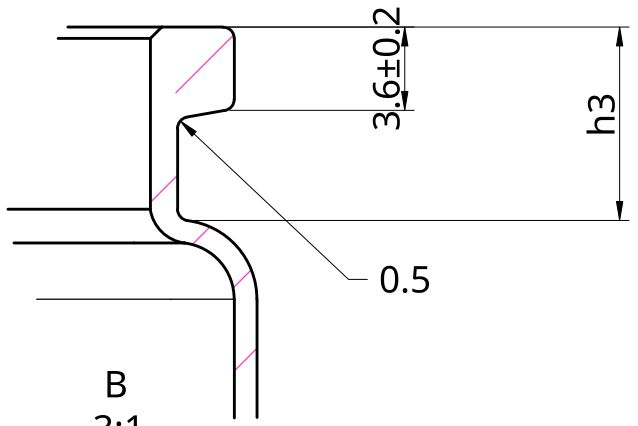

B
3:1

DIMENSION	BASIC (MM)	UPPER (MM)	LOWER (MM)	DIMENSION	BASIC (MM)	UPPER (MM)	LOWER (MM)
d1	22.00	0.20	0.20	s1	1.00	0.04	0.04
d2	20.00	0.20	0.30	s2	Min0.70	N/A	0.00
d3	Max16.50	0.00	N/A	r1	Approx3.5	-	-
d4	12.60	0.20	0.20	r2	Approx2.0	-	-
h1	40.00	0.50	0.50				
h2	Min26.00	N/A	0.00				
h3	8.50	0.50	0.50				

YANGTZE

DO NOT SCALE DRAWING

FIRST ANGLE PROJECTION

	NAME	SIGNATURE	DATE
DRAWN	June		2026-03-12
CHECKED	Aaron		2026-03-13
APPROVED	Aaron		2026-03-13

MATERIAL

FINISH

SKU: TGV-IS06-A

TITLE: Tubular Glass Vial
Type I, ISO 6R, Amber

SIZE	DWG NO.	REV.
A4	0006	1

SCALE	WEIGHT	SHEET
2:1		1 of 1