YANGTZE

TECHNICAL DATA SHEET

DOC REF: SE-AP-20-06-11-U-S-D-NE-250
VERSION: 1.0

PRODUCT IDENTIFICATION & VISUAL

Aluminum–Plastic Combination Cap

TECHNICAL DESCRIPTION:

20mm, grey color, washed and sterilized, ready to use Pkg: 250 pcs/bag, Double Bag



BLUEPRINT GEOMETRY

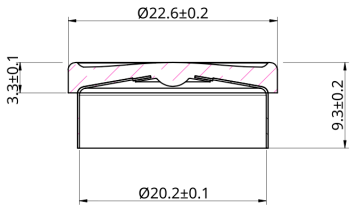

SYSTEM PACKAGING

CAP SPECS

Neck Adapter	20mm Standard
Mold No.	06
Cap Color	Grey

PACKAGING & PROCESSING

Delivery State	RTU
Sterilization	Steam
Bagging	Double Bag

LOGISTICS & HANDLING

Packing	250 pcs/Unit; Units/Box	Total	0 pcs/Box
Box Dimensions	x x mm	Volume	0.0000 m^3
Weight	N.W: kg; G.W: kg	Pallet	Standard

YANGTZE

TECHNICAL DATA SHEET

DOC REF: SE-AP-20-06-12-U-S-D-NE-250
VERSION: 1.0

PRODUCT IDENTIFICATION & VISUAL

Aluminum-Plastic Combination Cap

TECHNICAL DESCRIPTION:

20mm, orange color, washed and sterilized, ready to use Pkg: 250 pcs/bag, Double Bag



BLUEPRINT GEOMETRY

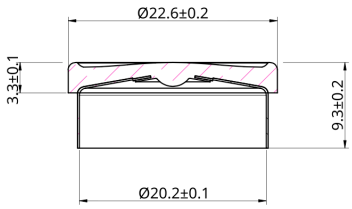

SYSTEM PACKAGING

CAP SPECS

Neck Adapter	20mm Standard
Mold No.	06
Cap Color	Orange

PACKAGING & PROCESSING

Delivery State	RTU
Sterilization	Steam
Bagging	Double Bag

LOGISTICS & HANDLING

Packing	250 pcs/Unit; Units/Box	Total	0 pcs/Box
Box Dimensions	x x mm	Volume	0.0000 m^3
Weight	N.W: kg; G.W: kg	Pallet	Standard

YANGTZE

TECHNICAL DATA SHEET

DOC REF: SE-AP-20-06-13-U-S-D-NE-250
VERSION: 1.0

PRODUCT IDENTIFICATION & VISUAL

Aluminum-Plastic Combination Cap

TECHNICAL DESCRIPTION:

20mm, red color, washed and sterilized, ready to use Pkg: 250 pcs/bag, Double Bag



BLUEPRINT GEOMETRY

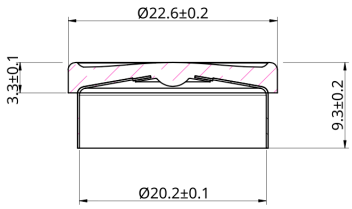

SYSTEM PACKAGING

CAP SPECS

Neck Adapter	20mm Standard
Mold No.	06
Cap Color	Red

PACKAGING & PROCESSING

Delivery State	RTU
Sterilization	Steam
Bagging	Double Bag

LOGISTICS & HANDLING

Packing	250 pcs/Unit; Units/Box	Total	0 pcs/Box
Box Dimensions	x x mm	Volume	0.0000 m^3
Weight	N.W: kg; G.W: kg	Pallet	Standard

YANGTZE

TECHNICAL DATA SHEET

DOC REF: SE-AP-20-06-04-U-S-D-NE-250
VERSION: 1.0

PRODUCT IDENTIFICATION & VISUAL

Aluminum-Plastic Combination Cap

TECHNICAL DESCRIPTION:

20mm, royal blue color, washed and sterilized, ready to use Pkg: 250 pcs/bag, Double Bag



BLUEPRINT GEOMETRY

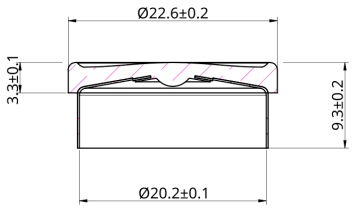

SYSTEM PACKAGING

CAP SPECS

Neck Adapter	20mm Standard
Mold No.	06
Cap Color	Royal Blue

PACKAGING & PROCESSING

Delivery State	RTU
Sterilization	Steam
Bagging	Double Bag

LOGISTICS & HANDLING

Packing	250 pcs/Unit; Units/Box	Total	0 pcs/Box
Box Dimensions	x x mm	Volume	0.0000 m^3
Weight	N.W: kg; G.W: kg	Pallet	Standard

YANGTZE

TECHNICAL DATA SHEET

DOC REF: SE-AP-20-06-14-U-S-D-NE-250
VERSION: 1.0

PRODUCT IDENTIFICATION & VISUAL

Aluminum-Plastic Combination Cap

TECHNICAL DESCRIPTION:

20mm, white color, washed and sterilized, ready to use Pkg: 250 pcs/bag, Double Bag



BLUEPRINT GEOMETRY

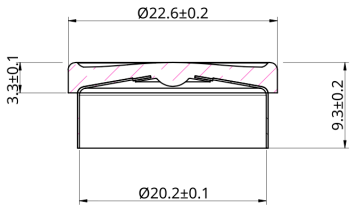

SYSTEM PACKAGING

CAP SPECS

Neck Adapter	20mm Standard
Mold No.	06
Cap Color	White

PACKAGING & PROCESSING

Delivery State	RTU
Sterilization	Steam
Bagging	Double Bag

LOGISTICS & HANDLING

Packing	250 pcs/Unit; Units/Box	Total	0 pcs/Box
Box Dimensions	x x mm	Volume	0.0000 m^3
Weight	N.W: kg; G.W: kg	Pallet	Standard

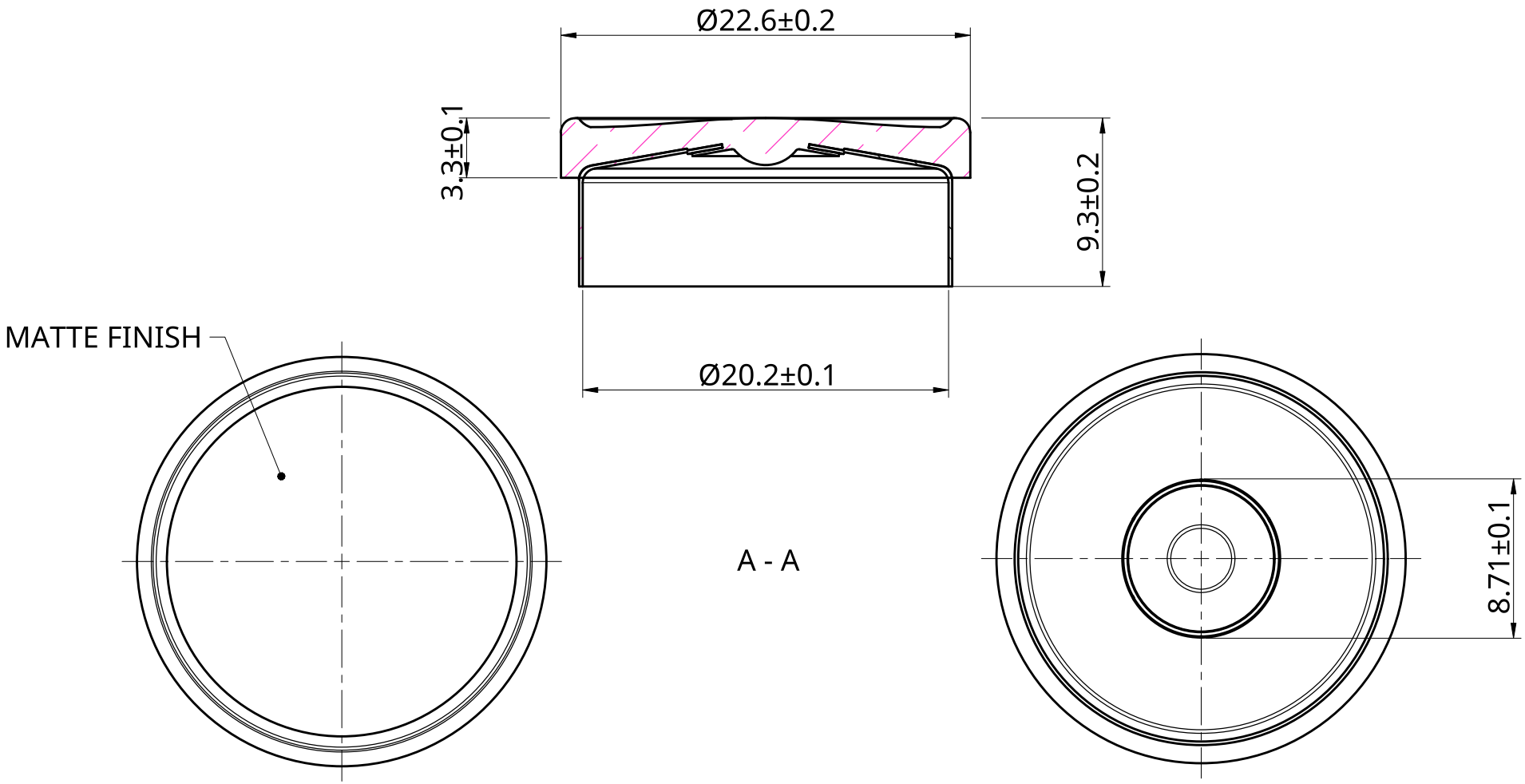

		NAME	SIGNATURE	DATE
YANGTZE	DRAWN	June		2026-09-11
	CHECKED	Aaron		2026-09-12
	APPROVED	Aaron		2026-09-12
DO NOT SCALE DRAWING				

FIRST ANGLE PROJECTION	MATERIAL	FINISH

SKU: SE-AP-20-06

TITLE: Aluminum-Plastic Cap 20mm

SIZE	DWG NO.	REV.
A4	0033	1

SCALE	WEIGHT	SHEET
3:1		1 of 1