YANGTZE

TECHNICAL DATA SHEET

DOC REF: ST-IJ-13A-03-C-U-G-D-NE-250
VERSION: 1.0

PRODUCT IDENTIFICATION & VISUAL

Halogenated Butyl Rubber Stopper for Injection

TECHNICAL DESCRIPTION:

13mm, Grey, Chlorobutyl, Washed and Sterilized, Ready to Use, 250 pcs/bag, 2 PE bag



BLUEPRINT GEOMETRY

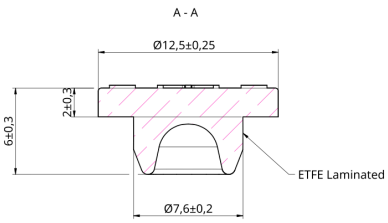

SYSTEM PACKAGING

CROWN PATTERN



SPECS

Neck Adapter	13mm Standard
ISO Type	Type A
Material	Chlorobutyl
Coating	Uncoated

PACKAGING & PROCESSING

Delivery State	RTU
Sterilization	Gamma Irradiation
Bagging	Double Bag

LOGISTICS & HANDLING

Packing	250 pcs/Unit; Units/Box	Total	0 pcs/Box
Box Dimensions	x x mm	Volume	0.0000 m^3
Weight	N.W: kg; G.W: kg	Pallet	Standard

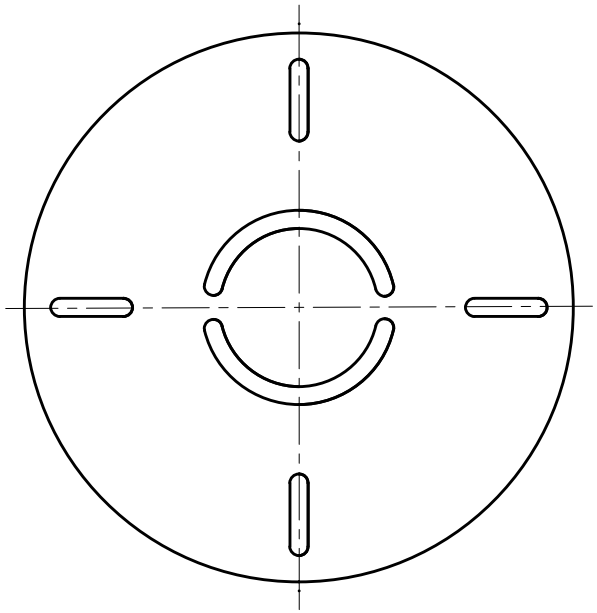

A - A

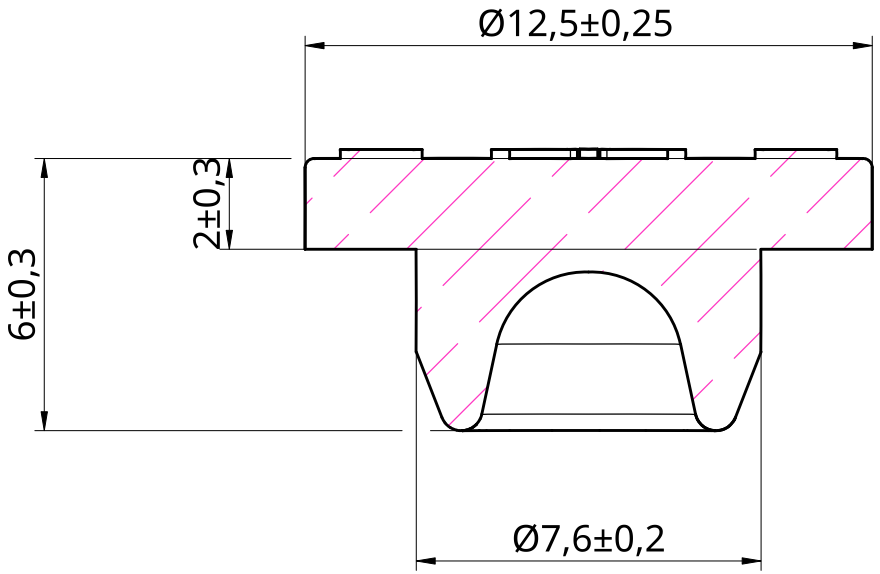

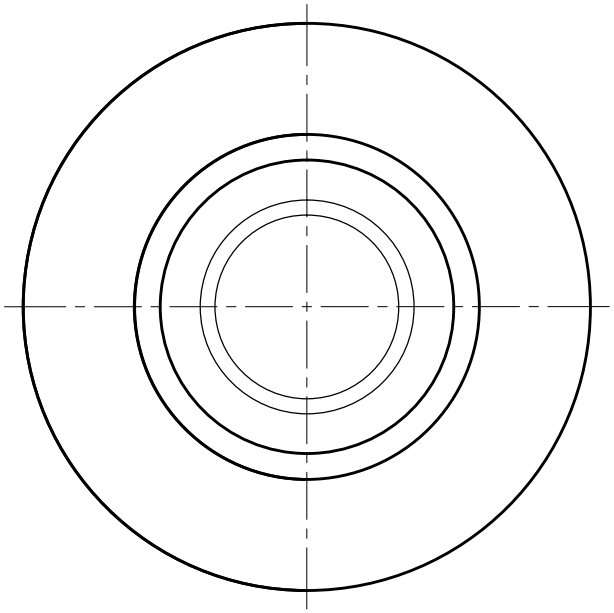

		NAME	SIGNATURE	DATE
YANGTZE	DRAWN	June		2026-09-11
	CHECKED	Aaron		2026-09-12
	APPROVED	Aaron		2026-09-12
DO NOT SCALE DRAWING				

FIRST ANGLE PROJECTION

MATERIAL

FINISH

SKU: ST-IJ-13A-03-C

TITLE: Halogenated Butyl Rubber Stopper
Chlorobutyl
13mm

SIZE	DWG NO.	REV.
A4	0035	1

SCALE	WEIGHT	SHEET
6:1		1 of 1